DWG.NO. HW1386204

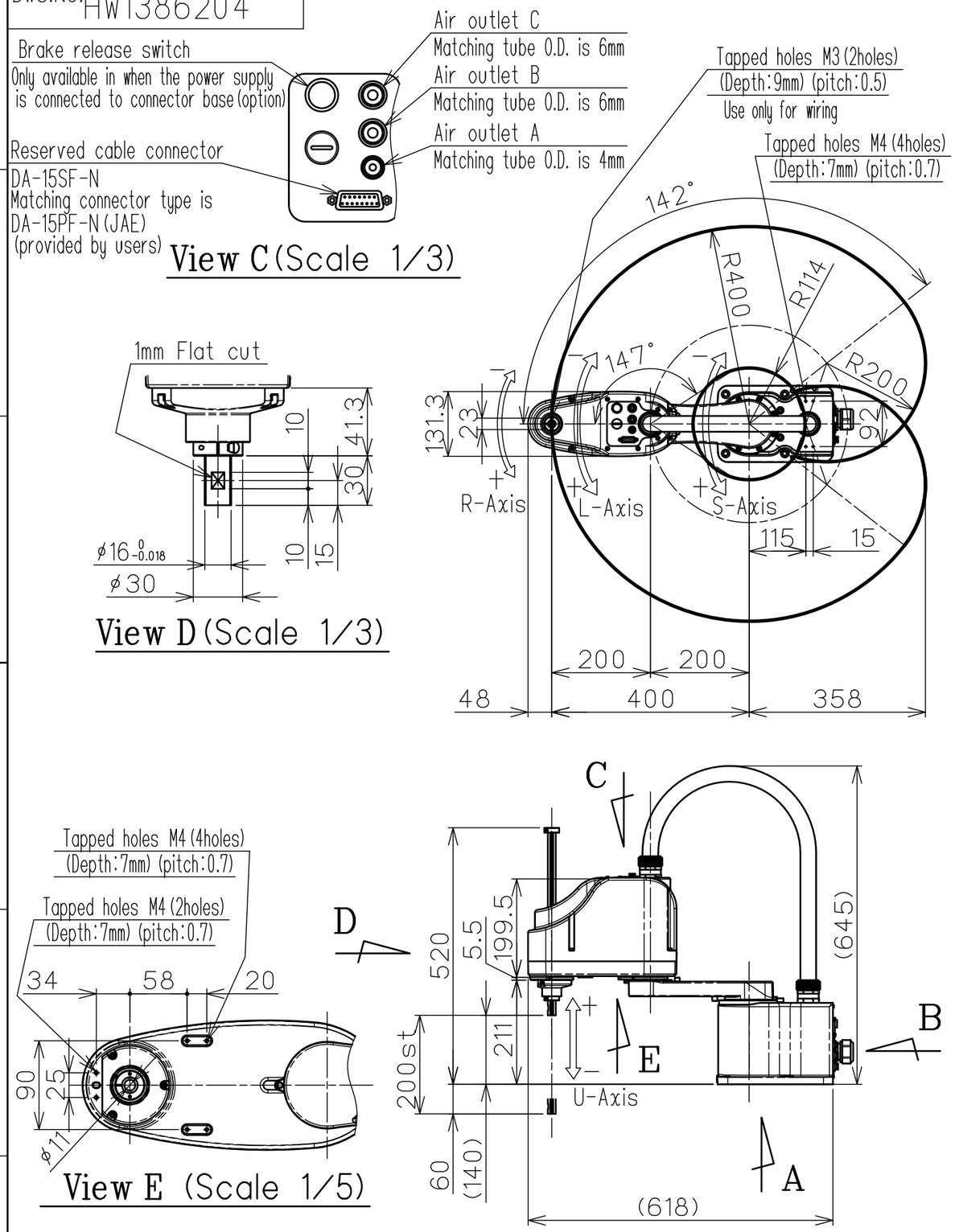


| Type | Note |
|---|---|
| YR-1-04SX400-A00 | STANDARD |

| Item \ Model | | MOTOMAN-SG400 |
|---|---|---|
| Configuration | | Horizontally Articulated |
| Degree of Freedom | | 4 |
| Payload | | 3kg |
| Repeatability | S-Axis+L-Axis | 0.01mm |
| | U-Axis | 0.01mm |
| | R-Axis | 0.004° |
| Range of Motion | S-Axis (first arm) | -142° - +142° |
| | L-Axis (second arm) | -147° - +147° |
| | U-Axis (Upper/lower) | 200mm |
| | R-Axis (rotation) | -360° - +360° |
| Maximum Speed | S-Axis | 12.9rad/s, 740°/s |
| | L-Axis | 13.9rad/s, 800°/s |
| | U-Axis | 1200mm/s |
| | R-Axis | 52.3rad/s, 3000°/s |
| Allowable Inertia (GD²/4) | R-Axis | 0.06kg·m² |
| Pressing Force | U-Axis | 150N (15.3kgf) |
| Approx. Mass | | 14kg |
| Protected structure | | IP20 |
| Mounting method | | Floor-mounted |
| Ambient Conditions | Temperature | 0 to 40℃ |
| | Humidity | 20 to 80%RH (Non-Condensing) |
| | Vibration | 4.9m/s² (0.5G) or less |
| | Altitude | 1000m or less |
| | Others | •Free from explosive and corrosive gas or liquid.<br>•Free from dust,soot,oil,or water.<br>•Free from excessive electrical noise.(plasma)<br>•Free from strong magnetic fields. |
| Power Requirements | | 1.0kVA |
| Controller | | YRC1000micro |

※1 The manipulator is in the home position.

Units : mm


Note:
1.All rights reserved.
2.Please note that the data is subject to be deleted without advance notice.
3.No warranty is given in relation to the data including the specification.
4.We are not responsible for any damages or loss caused by the use of the data.


FOR STUDY PURPOSE ONLY

SCALE 1 :10

YASKAWA 株式会社 安川電機

Reference Drawing

TITLE MOTOMAN-SG400 DIMENSION DIAGRAM

DRWN DATE '19.11.7

DWG.NO. HW1386204 ②

SIZE A3