DWG.NO. HW1385919

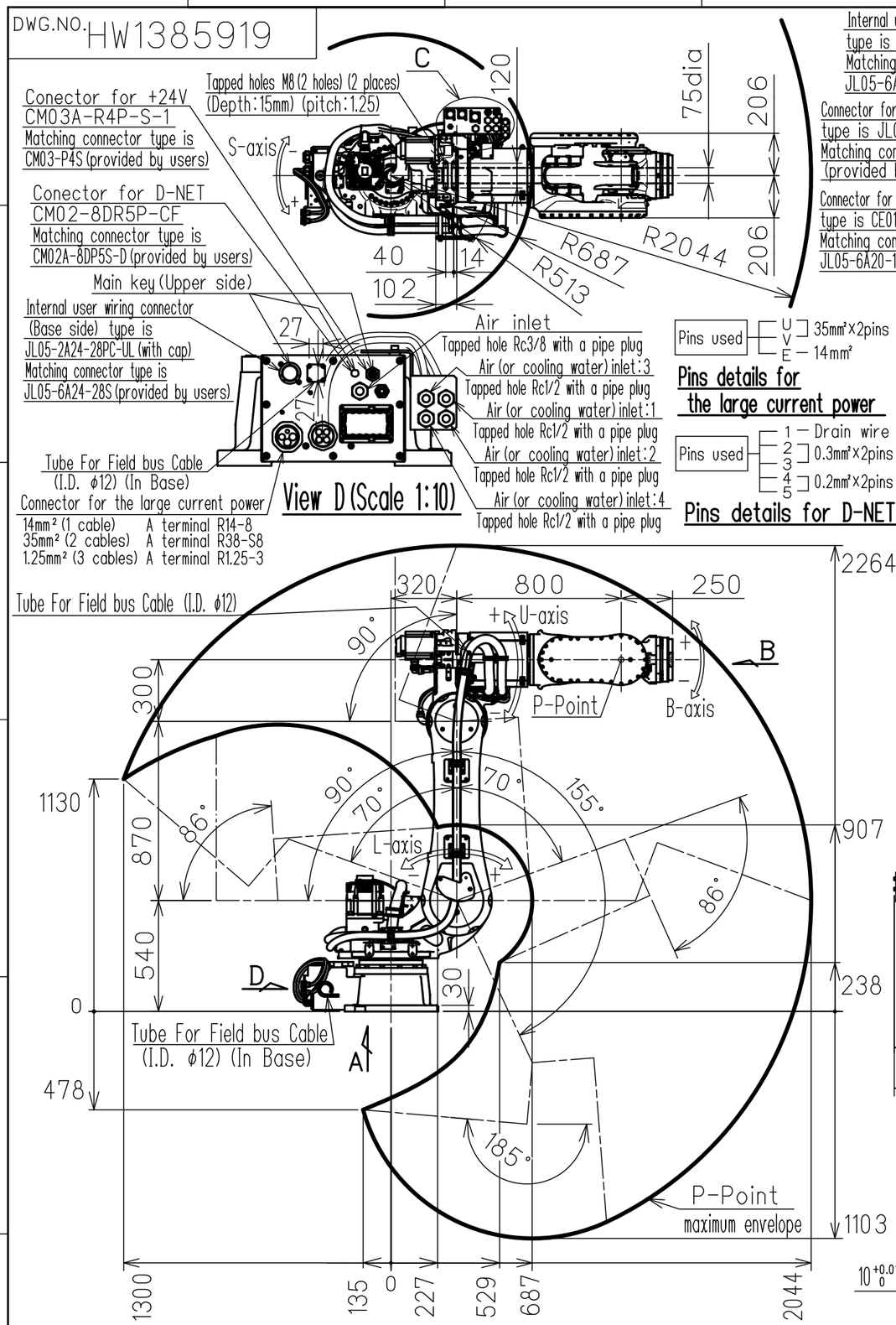

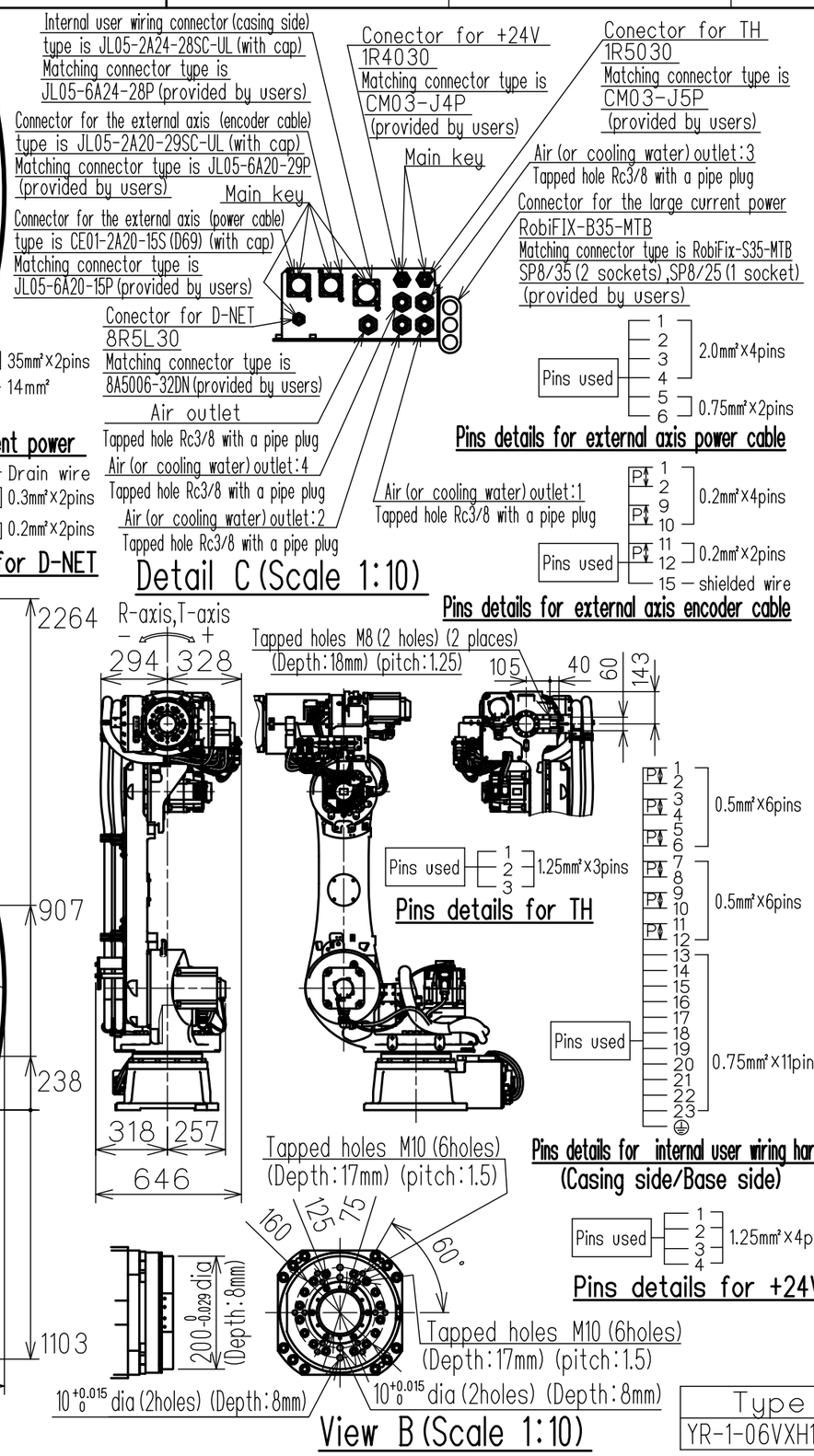

Pins used: U, V — 35mm²×2pins; E — 14mm²

Pins details for the large current power

Pins used: 1 — Drain wire; 2, 3 — 0.3mm²×2pins; 4, 5 — 0.2mm²×2pins

Pins details for D-NET

Pins used: 1, 2, 3, 4 — 2.0mm²×4pins; 5, 6 — 0.75mm²×2pins

Pins details for external axis power cable

Pins used: P 1, 2, 9, 10 — 0.2mm²×4pins; P 11, 12 — 0.2mm²×2pins; 15 — shielded wire

Pins details for external axis encoder cable

Pins used: P 1–6 — 0.5mm²×6pins; P 7–12 — 0.5mm²×6pins; 13–23, ⏚ — 0.75mm²×11pins

Pins details for internal user wiring harness (Casing side/Base side)

Pins used: 1, 2, 3 — 1.25mm²×3pins

Pins details for TH

Pins used: 1, 2, 3, 4 — 1.25mm²×4pins

Pins details for +24V

Type	Note
YR-1-06VXH110-A00	STANDARD

Item \ Model		MOTOMAN-SP110H
Configuration		Vertically articulated
Degree of Freedom		6
Payload	Wrist	110kg
	On U-arm	30kg
Repeatability (※1)		0.05 mm
Range of Motion	S-Axis (Turning)	-180° - +180°
	L-Axis (Lower Arm)	-90° - +155°
	U-Axis (Upper Arm)	-86° - +90°
	R-Axis (Roll)	-210° - +210°
	B-Axis (Pitch/Yaw)	-130° - +130°
	T-Axis (Twist)	-360° - +360°
Max Speed	S-Axis	2.44rad/s, 140°/s
	L-Axis	2.00 rad/s, 115°/s
	U-Axis	2.80 rad/s, 161°/s
	R-Axis	3.92 rad/s, 225°/s
	B-Axis	3.49 rad/s, 200°/s
	T-Axis	5.49 rad/s, 315°/s
Allowable Moment	R-Axis	721N・m (73.5kgf・m)
	B-Axis	721N・m (73.5kgf・m)
	T-Axis	315N・m (32kgf・m)
Allowable Inertia (GD²/4)	R-Axis	85kg・m²
	B-Axis	85kg・m²
	T-Axis	45kg・m²
Approx. Robot mass		730kg
Protected structure		Body: IP54 Wrist: IP65
Mounting method		Floor-mounted
Ambient Conditions	Temperature	0℃ to +45℃
	Humidity	20%RH to 80%RH (Non-condensing)
	Vibration	4.9m/s (0.5G) or less
	Altitude	1000m or less
	Flatness for installation	0.5mm or less
	Others	・Free from dirt, dust, oil soot, or water. ・Free from explosive and corrosive gas or liquid. ・Free from excessive electrical noise (plasma). ・Free from strong magnetic fields.
Power Requirements		5.0KVA
Controller		YRC1000

※1 Repeatabilitiy is conformed to ISO 9283.
※2 The manipulator is in the home position.

Units: mm

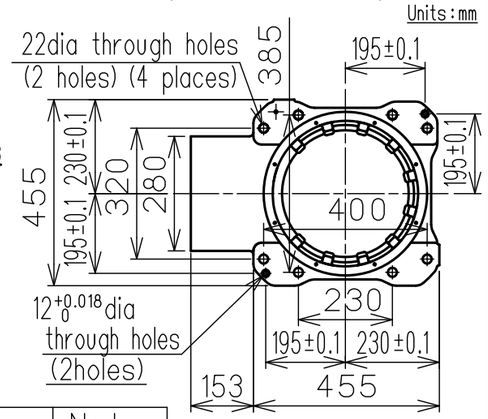

Note:
1. All rights reserved.
2. Please note that the data is subject to be deleted without advance notice.
3. No warranty is given in relation to the data including the specification.
4. We are not responsible for any damages or loss caused by the use of the data.

FOR STUDY PURPOSE ONLY

SCALE 1 :25

YASKAWA 株式会社 安川電機

Reference Drawing

TITLE MOTOMAN-SP110H DIMENSION DIAGRAM

DRWN DATE Feb.19.'18

DWG.NO. HW1385919 ◇2

SIZE A3