DWG.NO. HW1386007

Type	Note
YR-1-06VXH180-A00	STANDARD

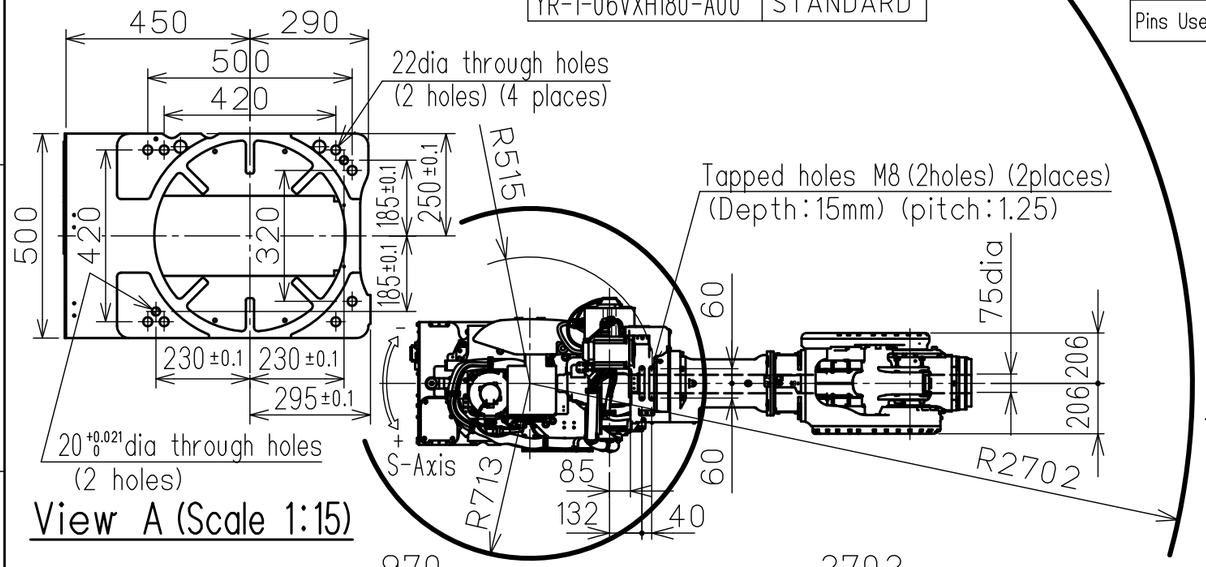

View A (Scale 1:15)

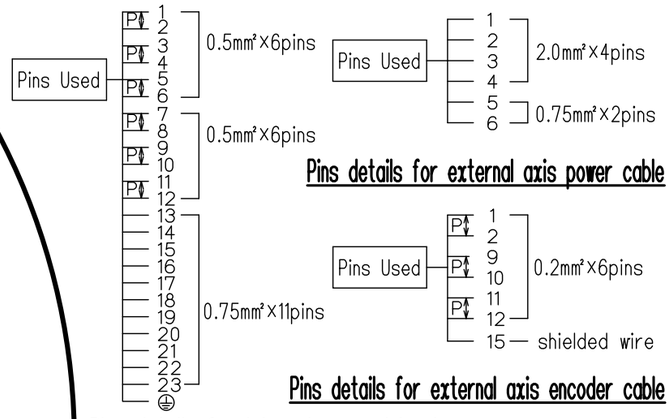

Pins details for external axis power cable

Pins details for external axis encoder cable

Pins details for internal user wiring harness
(Casing side/Base side)

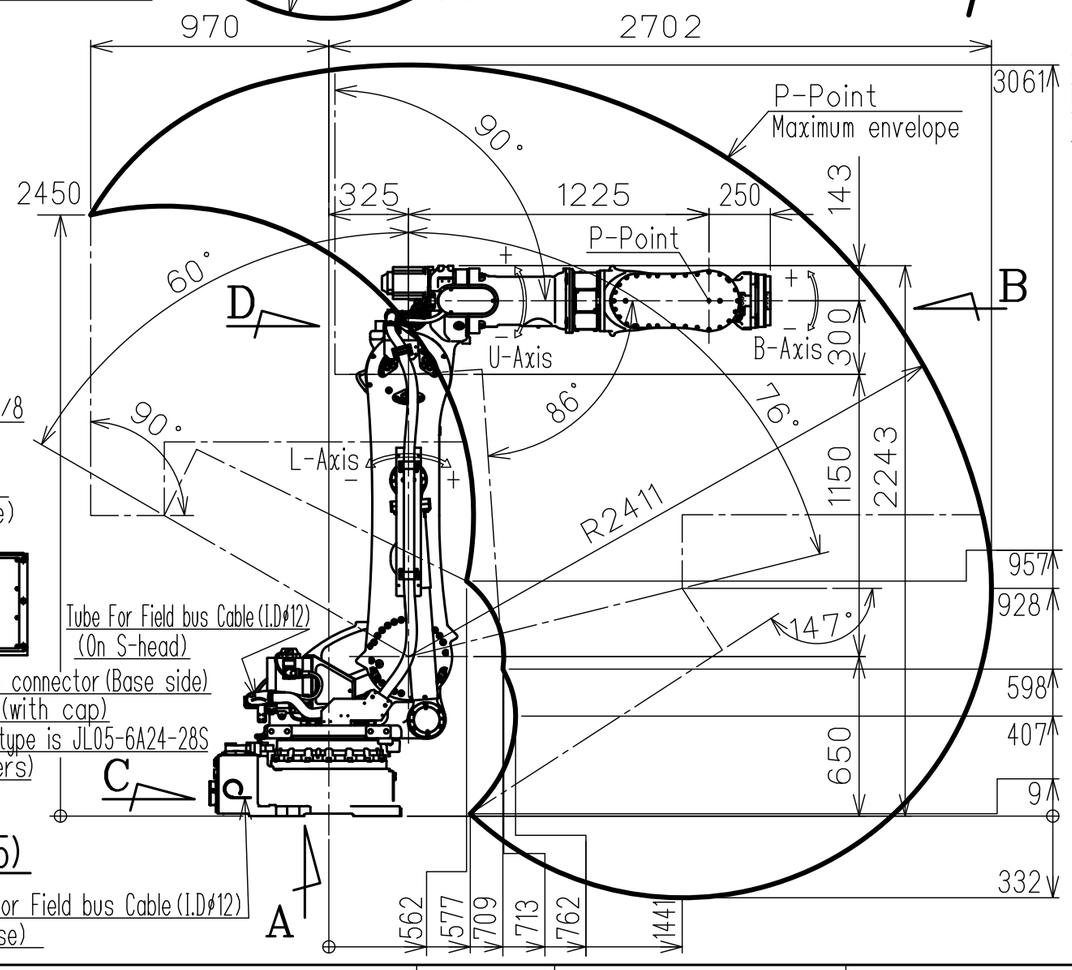

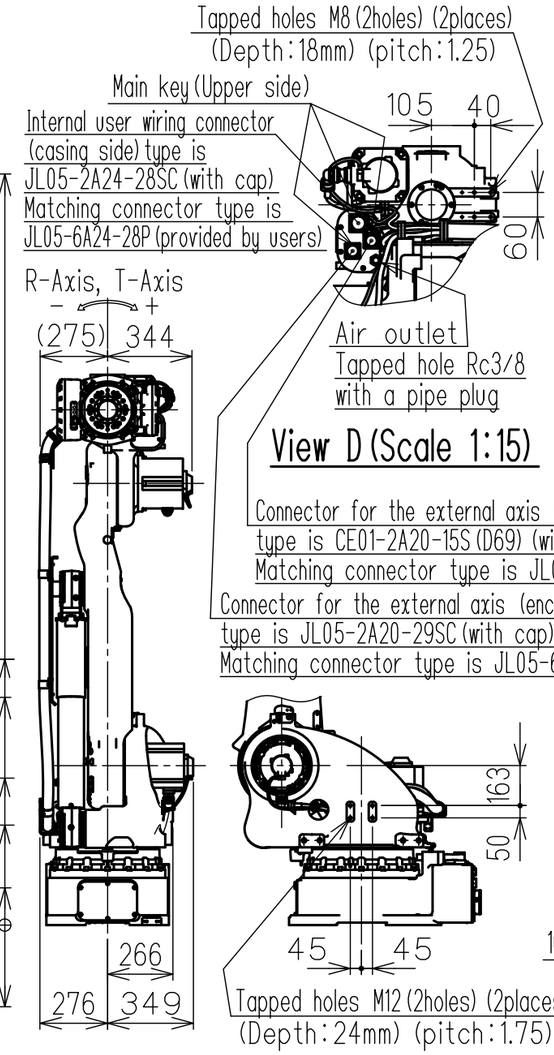

View D (Scale 1:15)

Connector for the external axis (power cable)
type is CE01-2A20-15S (D69) (with cap)
Matching connector type is JL05-6A20-15P (provided by users)

Connector for the external axis (encoder cable)
type is JL05-2A20-29SC (with cap)
Matching connector type is JL05-6A20-29P (provided by users)

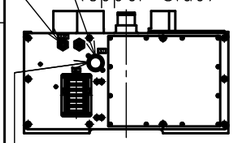

Tube For Field bus Cable (I.D φ12)
(On S-head)

Internal user wiring connector (Base side)
JL05-2A24-28PC (with cap)
Matching connector type is JL05-6A24-28S
(provided by users)

View C
(Scale 1:15)

Tube For Field bus Cable (I.D φ12)
(In Base)

Tapped holes M12 (2holes) (2places)
(Depth:24mm) (pitch:1.75)

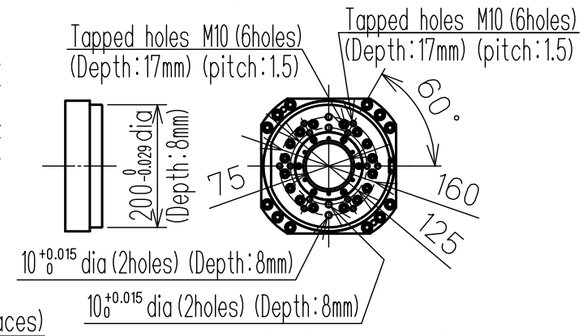

View B (Scale 1:10)

Item \ Model		MOTOMAN-SP180H
Configuration		Vertically articulated
Degree of Freedom		6
Payload	Wrist	180kg
	On U-arm	30kg
Repeatability (※1)		0.05 mm
Range of Motion	S-Axis (Turning)	-180° - +180°
	L-Axis (Lower Arm)	-60° - +76°
	U-Axis (Upper Arm)	-86° - +90°
	R-Axis (Roll)	-210° - +210°
	B-Axis (Pitch/Yaw)	-130° - +130°
	T-Axis (Twist)	-360° - +360°
Max Speed	S-Axis	2.09 rad/s,120°/s
	L-Axis	1.69 rad/s,97°/s
	U-Axis	2.01 rad/s,115°/s
	R-Axis	2.62 rad/s,150°/s
	B-Axis	2.62 rad/s,150°/s
	T-Axis	4.01 rad/s,230°/s
Allowable Moment	R-Axis	1000 N·m (102kgf·m)
	B-Axis	1000 N·m (102kgf·m)
	T-Axis	618 N·m (63kgf·m)
Allowable Inertia (GD²/4)	R-Axis	104kg·m²
	B-Axis	104kg·m²
	T-Axis	54kg·m²
Approx.Robot mass		1090kg
Protected structure		Body:IP54 Wrist:IP65
Mounting method		Floor-mounted
Ambient Conditions	Temperature	0℃ to +45℃
	Humidity	20%RH to 80%RH (Non-condensing)
	Vibration	4.9m/s² (0.5G) or less
	Altitude	1000m or less
	Flatness for installation	0.5mm or less
	Others	•Free from dirt,dust,oil soot,or water. •Free from explosive and corrosive gas or liquid. •Free from excessive electrical noise (plasma). •Free from strong magnetic fields.
Power Requirements		5.0kVA
Controller		YRC1000

※1 Repeatabilitiy is conformed to ISO 9283.
※2 The manipulator is in the home position.

Units:mm

Note:
1.All rights reserved.
2.Please note that the data is subject to be deleted without advance notice.
3.No warranty is given in relation to the data including the specification.
4.We are not responsible for any damages or loss caused by the use of the data.

FOR STUDY PURPOSE ONLY

SCALE 1 :25

YASKAWA
株式会社 安川電機

Reference Drawing

TITLE MOTOMAN-SP180H
DIMENSION DIAGRAM

DRWN DATE May.15.'18

DWG.NO. HW1386007 ②

SIZE A3